BAP2[BHP2]

如何订购/ HOW TO ORDER

BA	P	2	前盖 Front cover	旋向 Rotation	规格 Size	轴伸 Shaft	油口 Ports	油口位置 Ports position	油封 Seals	可选项 Options

系列号 Series

- BA- 前、后盖材料为铝合金 BA-Front and end cover material aluminum
- BH- 前、后盖材料为铸铁,压力比"BA"系列高 30bar 。 BH-Front and end cover material cast iron, pressure than "BA"series high 30 bar.

P- 齿轮泵 Pump

- M- 齿轮马达 Motor

组别 Group

前盖 Front cover

- A0
- B0
- B1
- B2
- Q0
- Q1
- Q2

旋向 Rotation

- D 顺时针转 Clockwise
- S 逆时针转 Counter clockwise
- R 可正反转 Reversible

规格 Size

3, 4, 6, 8, 10, 12, 14, 16, 18, 20, 22, 25, 28, 30

油口位置 /Ports position

省略-侧进侧出	Omit-Side inlet and side outlet
B-后进前出	B-Back inlet and front outlet
C-后进侧出	C-Back inlet and side outlet
D-侧进前出	D-Side inlet and front outlet
R-后进后出	R-Back inlet and back outlet

排油管 / Drain

- Q0-内部排油 / internal drain
- Q1-外部排油 / external drain G1/4
- Q2-外部排油 / external drain 9/16-18 UNF
- Q3-外部排油 / external drain 7/16-20 UNF
- Q4-外部排油 / external drain M12x1.5

油封

省略-温度范围在-10℃~+80℃,进油口最高绝对压力为3bar。
V-适用于高温介质，温度范围在-10℃~+120℃。
H-适用于低温介质，温度范围在-40℃~+80℃。
T-适用于进油口最大绝对压力3~6bar。
N-适用于进油口最大绝对压力3~10bar。

Seals

Omit-Range between -10℃ and +80℃,inlet pressure up to max. 3 bar absolute.
V-Version suitable for fluid at hi-temperatures, range between -10℃ and +120℃.
H-Version suitable for fluid at low-temperatures, range between -40℃ and +80℃.
T-Version suitable for inlet pressure up to max. 3 and 6 bar absolute.
N-Version suitable for inlet pressure up to max. 3 and 10 bar absolute.

可选项/Options

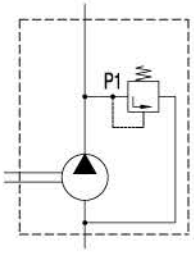

溢流阀。
卸压流量回到吸油口。
控制压力 P1=5...250bar。
Pressure relief valve.
Discharge returned to suction.
P1= 5...250 bar.

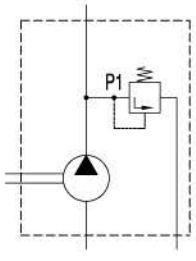

溢流阀。
卸压流量外泄。
控制压力 P1=5...250bar。
Pressure relief valve.
Discharge returned to externally.
P1= 5...250 bar.

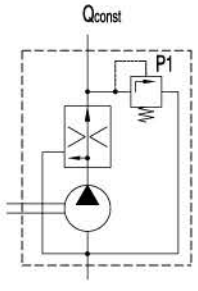

三通流量阀带安全阀。
剩余流量接泵吸油口。
控制压力 P1=100...180bar。
控制流量 Qconst=2...30L/min。
3-way flow control valve
with pressure relief valve.
Excess flow returned to suction.
P1= 100...180 bar.
Qconst= 2...30 L/min.

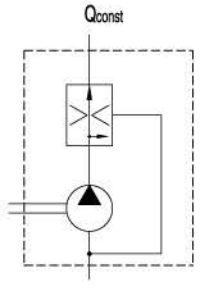

三通流量阀。
剩余流量接泵吸油口。
控制流量 Qconst=2...30L/min。
3-way flow control valve.
Excess flow returned to suction.
Qconst= 2...30 L/min.

订货号/Ordering code

Y	180xx
P	120xx
F	15015
Q	xxx15

范例/ Examples:

BHP2-B0-D-3-T0-E0 = 顺时针转，排量 3 cc/rev, B0 前盖， T0 1:8锥形轴伸，E0 安装油口，标准油封
clockwise rotation, 3 cc/rev, B0 front cover, 1:8 tapered shaft(T0), setting ports E0 type, standard seals

BAP2-A0-D-3-C0-U0 = 顺时针转，排量 3 cc/rev, A0 前盖， C0 圆柱轴伸，U0 安装油口，标准油封
clockwise rotation, 3 cc/rev, A0 front cover, C0 parallel shaft, setting ports U0 type, standard seals

BHP2-Q0-D-3-T1-F0-N= 顺时针转，排量 3 cc/rev, Q0 前盖， T0 1:8锥形轴伸，F0 安装油口,高压油封(N)
clockwise rotation, 3 cc/rev, Q0 front cover, 1:8 tapered shaft(T0), setting ports F0 type, high pressure seals(N)

BHP2B0

M6 螺纹深 13,M8 螺纹深 17.
安装泵时，n.4 M10 螺钉扭矩设定为 70...75 Nm.
轴伸 M12x1.25 螺母扭矩设定为 50 Nm.

M6 thread depth 13,M8 thread depth 17.
To mount the pump, n.4 M10 screws, with a torque wrench setting fixed at 70...75 Nm.
Shaft M12x1.25 nut, with a torque wrench setting fixed at 50 Nm.

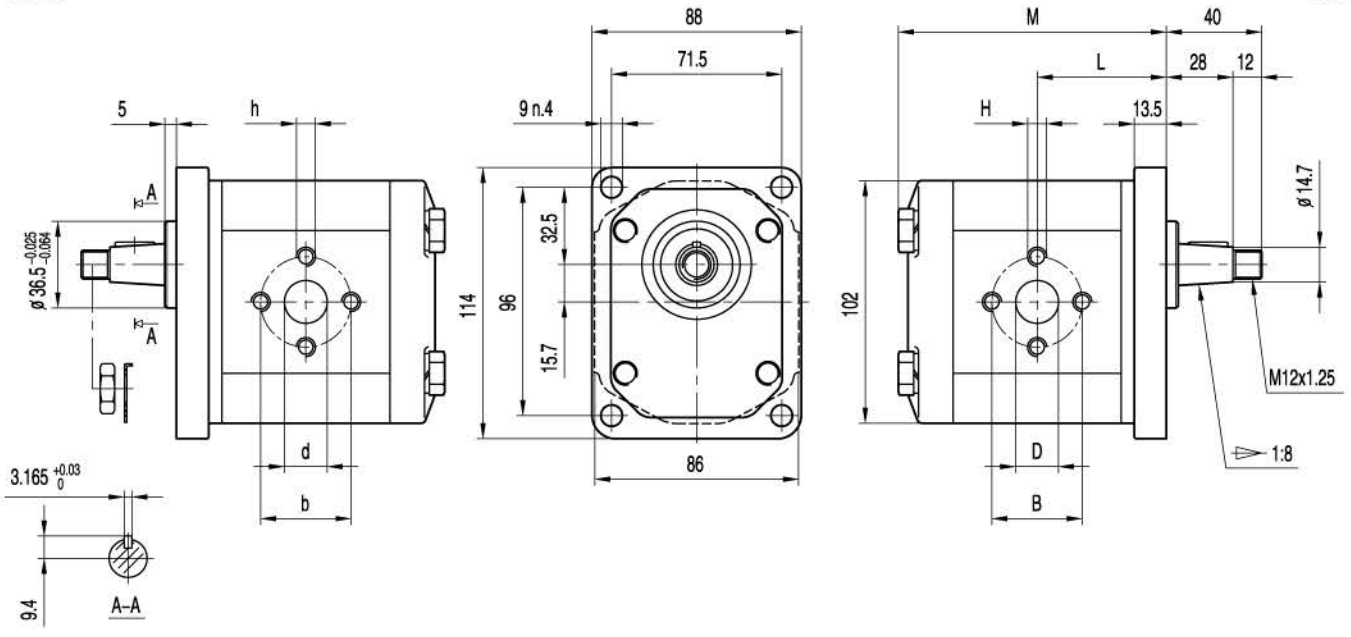

规格 Type	排量 Displacement	最大压力 Max pressure			最高转速 Max. speed	最低转速 Min. speed	尺寸 Dimensions							
		P1	P2	P3			M	L	B	D	H	b	d	h
	(cm³/rev)	bar	bar	bar	(r/min)	(r/min)	mm	mm	mm	mm		mm	mm	
BHP2B0-D-3	3	270	285	300	4000	800	91.1	43.6	30	13	M6	30	13	M6
BHP2B0-D-4	4	270	285	300	4000	600	92.7	44.4	30	13	M6	30	13	M6
BHP2B0-D-6	6	270	285	300	4000	600	96	46	30	13	M6	30	13	M6
BHP2B0-D-8	8	270	285	300	3500	500	99.3	47.7	30	13	M6	30	13	M6
BHP2B0-D-10	10	270	285	300	3000	500	102.6	49.3	40	20	M8	30	13	M6
BHP2B0-D-12	12	270	285	300	3000	500	105.9	51	40	20	M8	30	13	M6
BHP2B0-D-14	14	250	265	280	4000	500	109.3	52.7	40	20	M8	30	13	M6
BHP2B0-D-16	16	250	265	280	4000	500	112.7	54.4	40	20	M8	30	13	M6
BHP2B0-D-18	18	250	265	280	3600	400	116	56	40	20	M8	30	13	M6
BHP2B0-D-20	20	220	235	250	3200	400	119.3	57.7	40	20	M8	30	13	M6
BHP2B0-D-22	22	220	235	250	3000	400	122.6	59.3	40	20	M8	30	13	M6
BHP2B0-D-25	25	200	215	230	3000	400	127.6	61.8	40	22	M8	30	13	M6
BHP2B0-D-28	28	180	190	200	2500	400	132.6	64.3	40	22	M8	30	13	M6
BHP2B0-D-30	30	160	170	180	2500	400	135.9	66	40	22	M8	30	13	M6

BHP2B1

M8 螺纹深 16.
安装泵时，n.4 M10 螺钉扭矩设定为 70...75 Nm.

M8 thread depth 16.
To mount the pump, n.4 M10 screws, with a torque wrench setting fixed at 70...75 Nm.

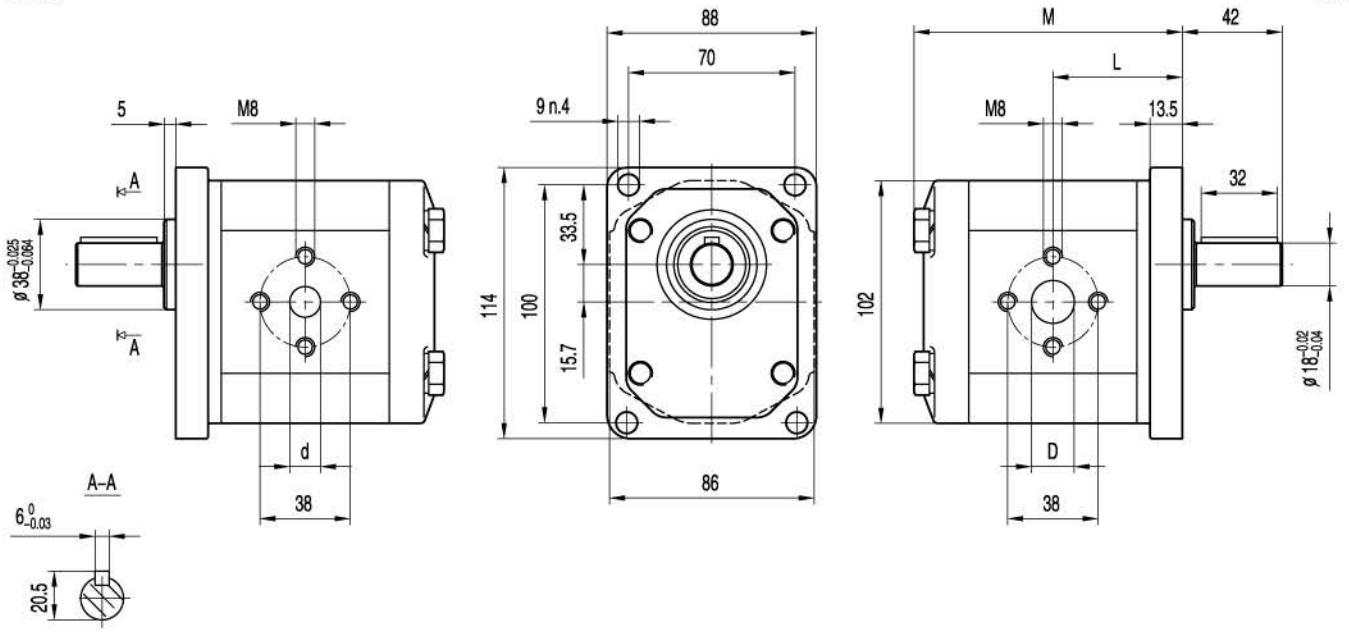

规格 Type	排量 Displacement	最大压力 Max pressure			最高转速 Max. speed	最低转速 Min. speed	尺寸 Dimensions			
		P1	P2	P3			M	L	D	d
	(cm^3/rev)	bar	bar	bar	(r/min)	(r/min)	mm	mm	mm	mm
BHP2B1-D-3	3	270	285	300	4000	800	91.1	43.6	14	10
BHP2B1-D-4	4	270	285	300	4000	600	92.7	44.4	14	10
BHP2B1-D-6	6	270	285	300	4000	600	96	46	14	10
BHP2B1-D-8	8	270	285	300	3500	500	99.3	47.7	14	10
BHP2B1-D-10	10	270	285	300	3000	500	102.6	49.3	18	15
BHP2B1-D-12	12	270	285	300	3000	500	105.9	51	18	15
BHP2B1-D-14	14	250	265	280	4000	500	109.3	52.7	18	15
BHP2B1-D-16	16	250	265	280	4000	500	112.7	54.4	18	15
BHP2B1-D-18	18	250	265	280	3600	400	116	56	18	15
BHP2B1-D-20	20	220	235	250	3200	400	119.3	57.7	18	15
BHP2B1-D-22	22	220	235	250	3000	400	122.6	59.3	18	15
BHP2B1-D-25	25	200	215	230	3000	400	127.6	61.8	20	15
BHP2B1-D-28	28	180	190	200	2500	400	132.6	64.3	20	15
BHP2B1-D-30	30	160	170	180	2500	400	135.9	66	20	15

BHP2B2

M6 螺纹深 13.
安装泵时，n.4 M10 螺钉扭矩设定为 70...75 Nm.
轴伸 M12x1.5 螺母扭矩设定为 50 Nm.

M6 thread depth 13.
To mount the pump, n.4 M10 screws, with a torque wrench setting fixed at 70...75 Nm.
Shaft M12x1.5 nut, with a torque wrench setting fixed at 50 Nm.

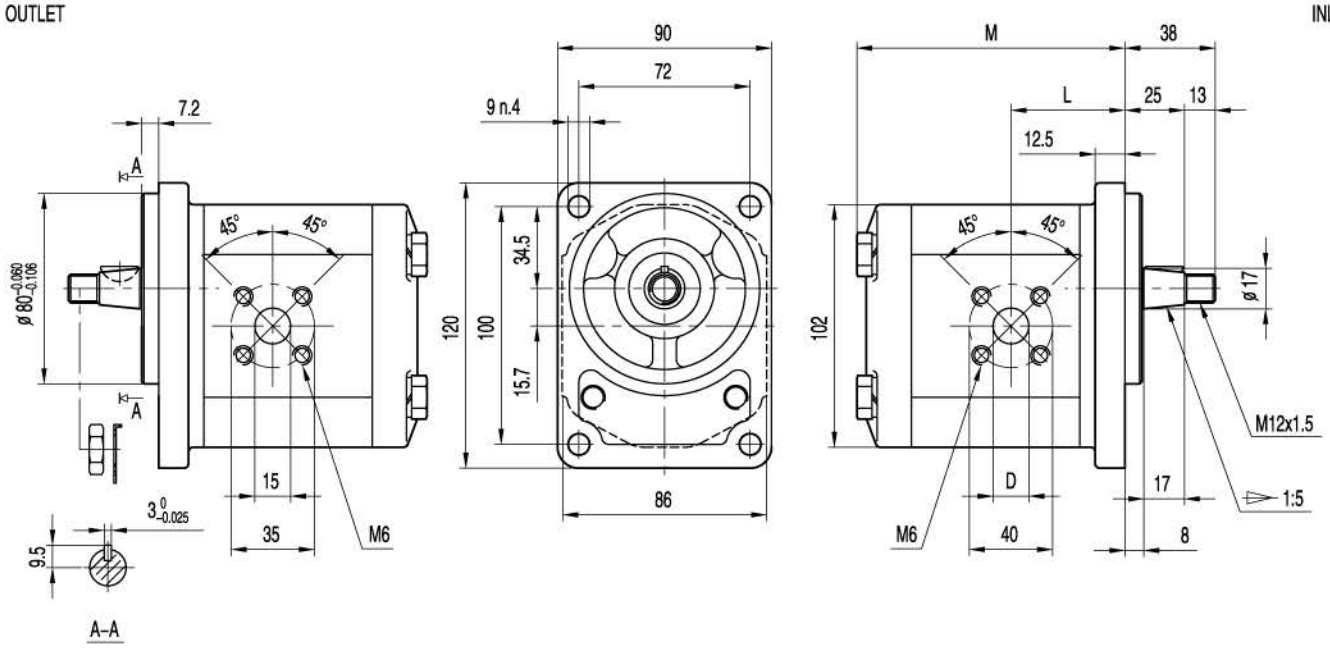

规格 Type	排量 Displacement	最大压力 Max pressure			最高转速 Max. speed	最低转速 Min. speed	尺寸 Dimensions		
		P1	P2	P3			M	L	D
	(cm^3/rev)	bar	bar	bar	(r/min)	(r/min)	mm	mm	mm
BHP2B2-D-3	3	270	285	300	4000	800	91.1	39.9	15
BHP2B2-D-4	4	270	285	300	4000	600	92.7	39.9	15
BHP2B2-D-6	6	270	285	300	4000	600	96	41.1	15
BHP2B2-D-8	8	270	285	300	3500	500	99.3	43.2	15
BHP2B2-D-10	10	270	285	300	3000	500	102.6	43.7	20
BHP2B2-D-12	12	270	285	300	3000	500	105.9	47.5	20
BHP2B2-D-14	14	250	265	280	4000	500	109.3	47.5	20
BHP2B2-D-16	16	250	265	280	4000	500	112.7	47.5	20
BHP2B2-D-18	18	250	265	280	3600	400	116	47.5	20
BHP2B2-D-20	20	220	235	250	3200	400	119.3	47.5	20
BHP2B2-D-22	22	220	235	250	3000	400	122.6	55.1	20
BHP2B2-D-25	25	200	215	230	3000	400	127.6	61.8	20
BHP2B2-D-28	28	180	190	200	2500	400	132.6	64.3	20
BHP2B2-D-30	30	160	170	180	2500	400	135.9	66	20

BHP2A0[BAP2A0]

"D"和"d"油口有螺纹加工，用O形圈密封,旁侧削平的SAE J1926/1 (ISO J1926-1)。

"D" and "d" ports are machined in compliance with threaded port with O-ring seal in truncated housing SAE J1926/1(ISO J1926-1).

安装法兰材料 Mounting flange material	V Screws tightening torque Nm
Aluminum	40...45
Cast iron	70...75

出油口
OUTLET

进油口
INLET

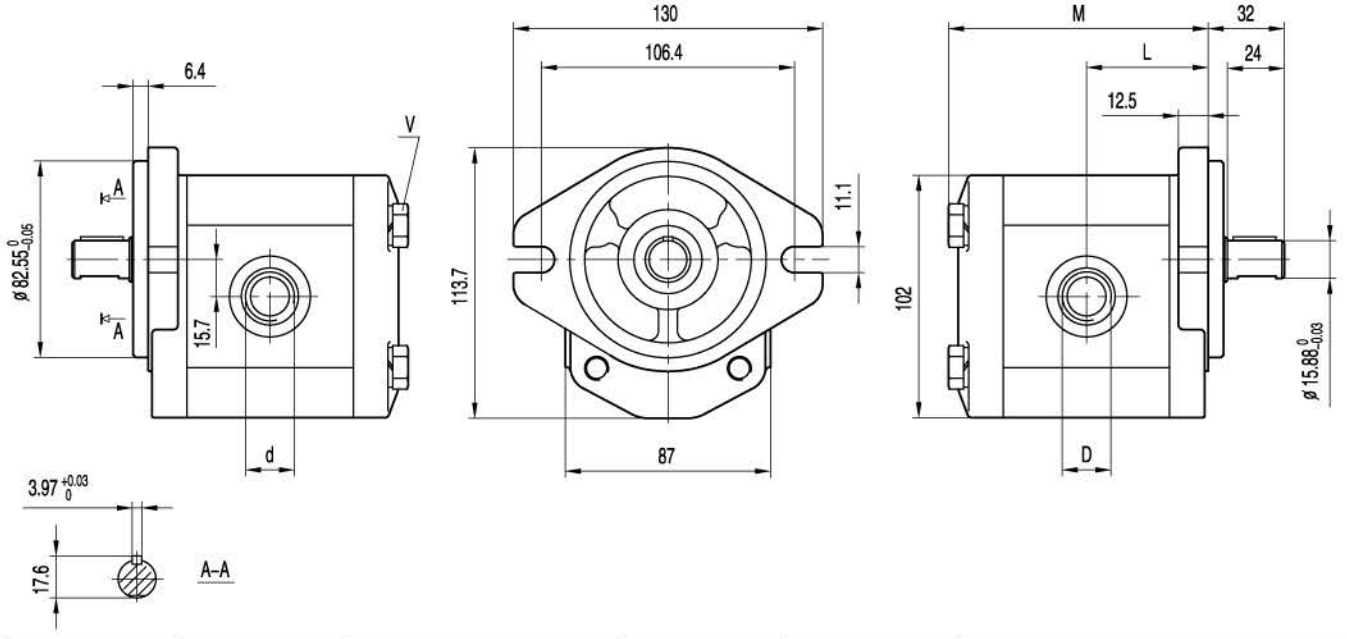

规格 Type	排量 Displacement	最大压力 Max pressure			最高转速 Max. speed	最低转速 Min. speed	尺寸 Dimensions			
		P1	P2	P3			M	L	D	d
	(cm^3/rev)	bar	bar	bar	(r/min)	(r/min)	mm	mm		
BHP2A0-D-3	3	270	285	300	4000	800	91.1	43.6	1 1/16-12UNF	7/8-14UNF
BHP2A0-D-4	4	270	285	300	4000	600	92.7	44.4	1 1/16-12UNF	7/8-14UNF
BHP2A0-D-6	6	270	285	300	4000	600	96	46	1 1/16-12UNF	7/8-14UNF
BHP2A0-D-8	8	270	285	300	3500	500	99.3	47.7	1 1/16-12UNF	7/8-14UNF
BHP2A0-D-10	10	270	285	300	3000	500	102.6	49.3	1 1/16-12UNF	7/8-14UNF
BHP2A0-D-12	12	270	285	300	3000	500	105.9	51	1 1/16-12UNF	7/8-14UNF
BHP2A0-D-14	14	250	265	280	4000	500	109.3	52.7	1 1/16-12UNF	7/8-14UNF
BHP2A0-D-16	16	250	265	280	4000	500	112.7	54.4	1 1/16-12UNF	7/8-14UNF
BHP2A0-D-18	18	250	265	280	3600	400	116	56	1 1/16-12UNF	7/8-14UNF
BHP2A0-D-20	20	220	235	250	3200	400	119.3	57.7	1 1/16-12UNF	7/8-14UNF
BHP2A0-D-22	22	220	235	250	3000	400	122.6	59.3	1 1/16-12UNF	7/8-14UNF
BHP2A0-D-25	25	200	215	230	3000	400	127.6	61.8	1 1/16-12UNF	7/8-14UNF
BHP2A0-D-28	28	180	190	200	2500	400	132.6	64.3	1 1/16-12UNF	7/8-14UNF
BHP2A0-D-30	30	160	170	180	2500	400	135.9	66	1 5/16-12UNF	7/8-14UNF

BHP2Q0

M6 螺纹深 13.
安装泵时，n.2 M10 螺钉扭矩设定为 45...50 Nm.
轴伸 M12x1.5 螺母扭矩设定为 50 Nm.

M6 thread depth 13.
To mount the pump, n.2 M10 screws, with a torque wrench setting fixed at 45...50 Nm.
Shaft M12x1.5 nut, with a torque wrench setting fixed at 50 Nm.

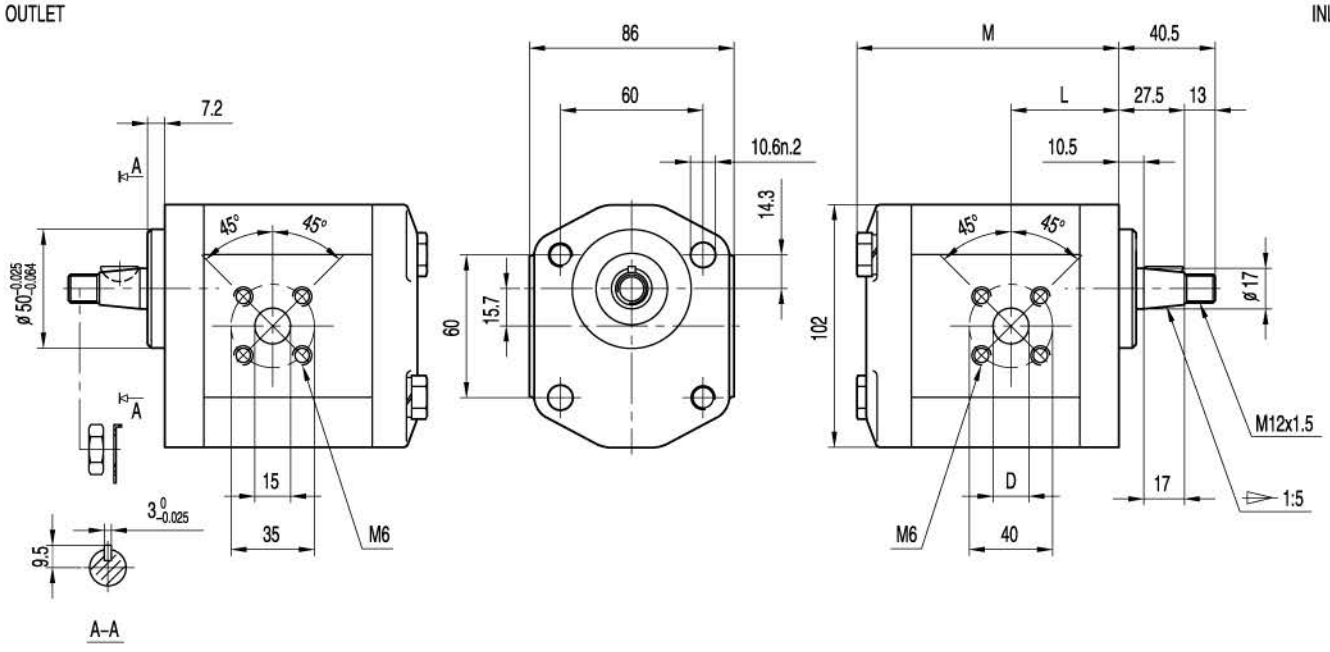

规格 Type	排量 Displacement	最大压力 Max pressure			最高转速 Max. speed	最低转速 Min. speed	尺寸 Dimensions		
		P1	P2	P3			M	L	D
	(cm³/rev)	bar	bar	bar	(r/min)	(r/min)	mm	mm	mm
BHP2Q0-D-3	3	270	285	300	4000	800	88.6	37.4	15
BHP2Q0-D-4	4	270	285	300	4000	600	90.2	37.4	15
BHP2Q0-D-6	6	270	285	300	4000	600	93.5	38.6	15
BHP2Q0-D-8	8	270	285	300	3500	500	96.8	40.7	15
BHP2Q0-D-10	10	270	285	300	3000	500	100.1	41.2	20
BHP2Q0-D-12	12	270	285	300	3000	500	103.4	45	20
BHP2Q0-D-14	14	250	265	280	4000	500	106.8	45	20
BHP2Q0-D-16	16	250	265	280	4000	500	110.2	45	20
BHP2Q0-D-18	18	250	265	280	3600	400	113.5	45	20
BHP2Q0-D-20	20	220	235	250	3200	400	116.8	45	20
BHP2Q0-D-22	22	220	235	250	3000	400	120.1	52.6	20
BHP2Q0-D-25	25	200	215	230	3000	400	125.1	59.3	20
BHP2Q0-D-28	28	180	190	200	2500	400	130.1	61.8	20
BHP2Q0-D-30	30	160	170	180	2500	400	133.4	63.5	20

BHP2Q1

M6 螺纹深 13.
安装泵时，n.2 M10 螺钉扭矩设定为 45...50 Nm.
轴伸 M12x1.5 螺母扭矩设定为 50 Nm.

M6 thread depth 13.
To mount the pump, n.2 M10 screws, with a torque wrench setting fixed at 45...50 Nm.
Shaft M12x1.5 nut, with a torque wrench setting fixed at 50 Nm.

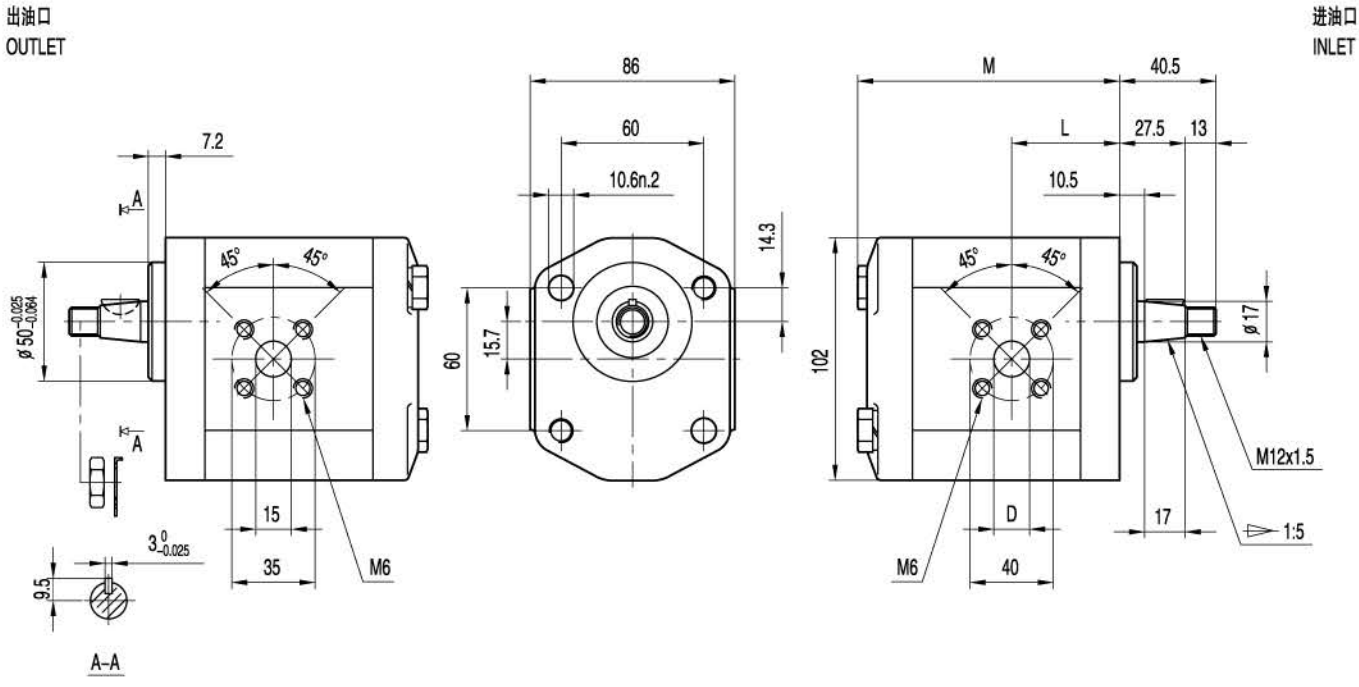

规格 Type	排量 Displacement	最大压力 Max pressure			最高转速 Max. speed	最低转速 Min. speed	尺寸 Dimensions		
		P1	P2	P3			M	L	D
	(cm³/rev)	bar	bar	bar	(r/min)	(r/min)	mm	mm	mm
BHP2Q1-D-3	3	270	285	300	4000	800	88.6	37.4	15
BHP2Q1-D-4	4	270	285	300	4000	600	90.2	37.4	15
BHP2Q1-D-6	6	270	285	300	4000	600	93.5	38.6	15
BHP2Q1-D-8	8	270	285	300	3500	500	96.8	40.7	15
BHP2Q1-D-10	10	270	285	300	3000	500	100.1	41.2	20
BHP2Q1-D-12	12	270	285	300	3000	500	103.4	45	20
BHP2Q1-D-14	14	250	265	280	4000	500	106.8	45	20
BHP2Q1-D-16	16	250	265	280	4000	500	110.2	45	20
BHP2Q1-D-18	18	250	265	280	3600	400	113.5	45	20
BHP2Q1-D-20	20	220	235	250	3200	400	116.8	45	20
BHP2Q1-D-22	22	220	235	250	3000	400	120.1	52.6	20
BHP2Q1-D-25	25	200	215	230	3000	400	125.1	59.3	20
BHP2Q1-D-28	28	180	190	200	2500	400	130.1	61.8	20
BHP2Q1-D-30	30	160	170	180	2500	400	133.4	63.5	20

BHP2Q2

M6 螺纹深 13.
安装泵时，n.2 M10 螺钉扭矩设定为 45...50 Nm.
联接套最大扭矩为 70 Nm.

M6 thread depth 13.
To mount the pump, n.2 M10 screws, with a torque wrench setting fixed at 45...50 Nm.
Shaft M12x1.5 nut, with a torque Coupling Max. torque 70 Nm.

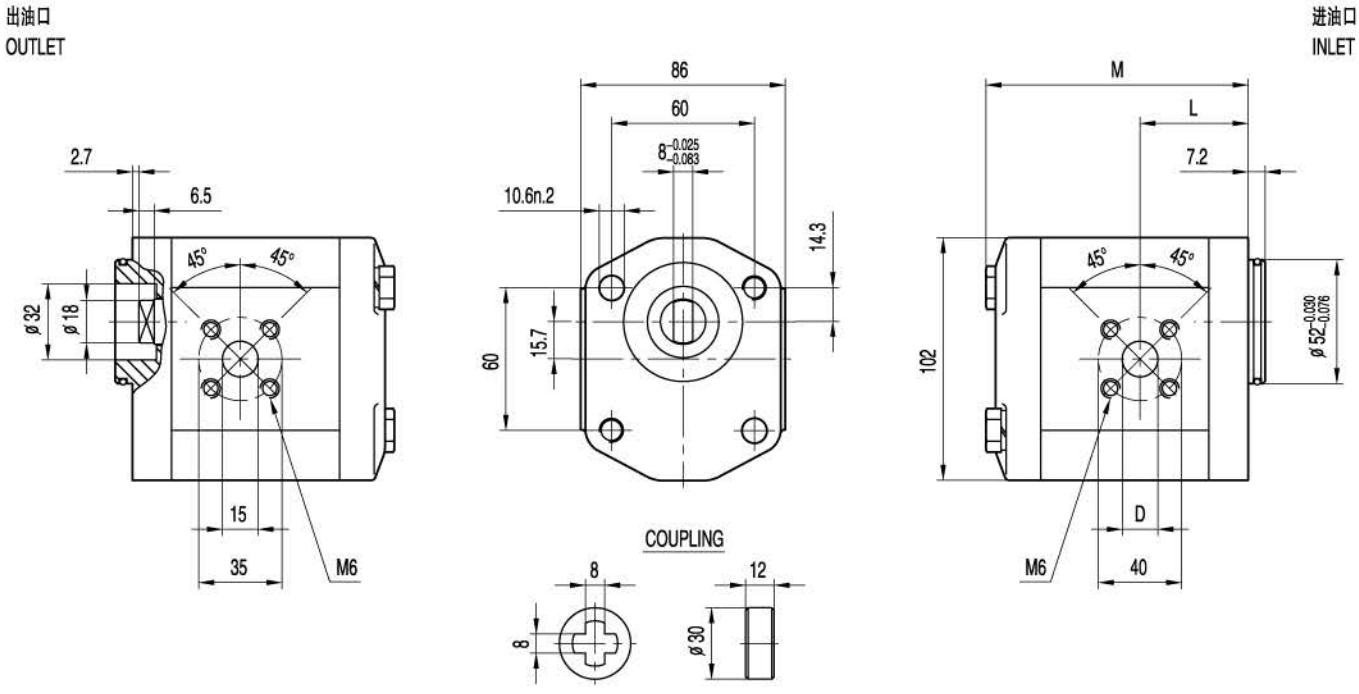

规格 Type	排量 Displacement	最大压力 Max pressure			最高转速 Max. speed	最低转速 Min. speed	尺寸 Dimensions		
		P1	P2	P3			M	L	D
	(cm³/rev)	bar	bar	bar	(r/min)	(r/min)	mm	mm	mm
BHP2Q2-D-3	3	270	285	300	4000	800	88.6	37.4	15
BHP2Q2-D-4	4	270	285	300	4000	600	90.2	37.4	15
BHP2Q2-D-6	6	270	285	300	4000	600	93.5	38.6	15
BHP2Q2-D-8	8	270	285	300	3500	500	96.8	40.7	15
BHP2Q2-D-10	10	270	285	300	3000	500	100.1	41.2	20
BHP2Q2-D-12	12	270	285	300	3000	500	103.4	45	20
BHP2Q2-D-14	14	250	265	280	4000	500	106.8	45	20
BHP2Q2-D-16	16	250	265	280	4000	500	110.2	45	20
BHP2Q2-D-18	18	250	265	280	3600	400	113.5	45	20
BHP2Q2-D-20	20	220	235	250	3200	400	116.8	45	20
BHP2Q2-D-22	22	220	235	250	3000	400	120.1	52.6	20
BHP2Q2-D-25	25	200	215	230	3000	400	125.1	59.3	20
BHP2Q2-D-28	28	180	190	200	2500	400	130.1	61.8	20
BHP2Q2-D-30	30	160	170	180	2500	400	133.4	63.5	20

BHP2A0-R

"D"和"d"油口有螺纹加工，用O形圈密封,旁侧削平的SAE J1926/1 (ISO J1926-1)。
安装泵时，n.4 M10 螺钉扭矩设定为 70...75 Nm.

"D" and "d" ports are machined in compliance with threaded port with O-ring seal in truncated housing SAE J1926/1(ISO J1926-1).
To mount the pump, n.4 M10 screws, with a torque wrench setting fixed at 70...75 Nm.

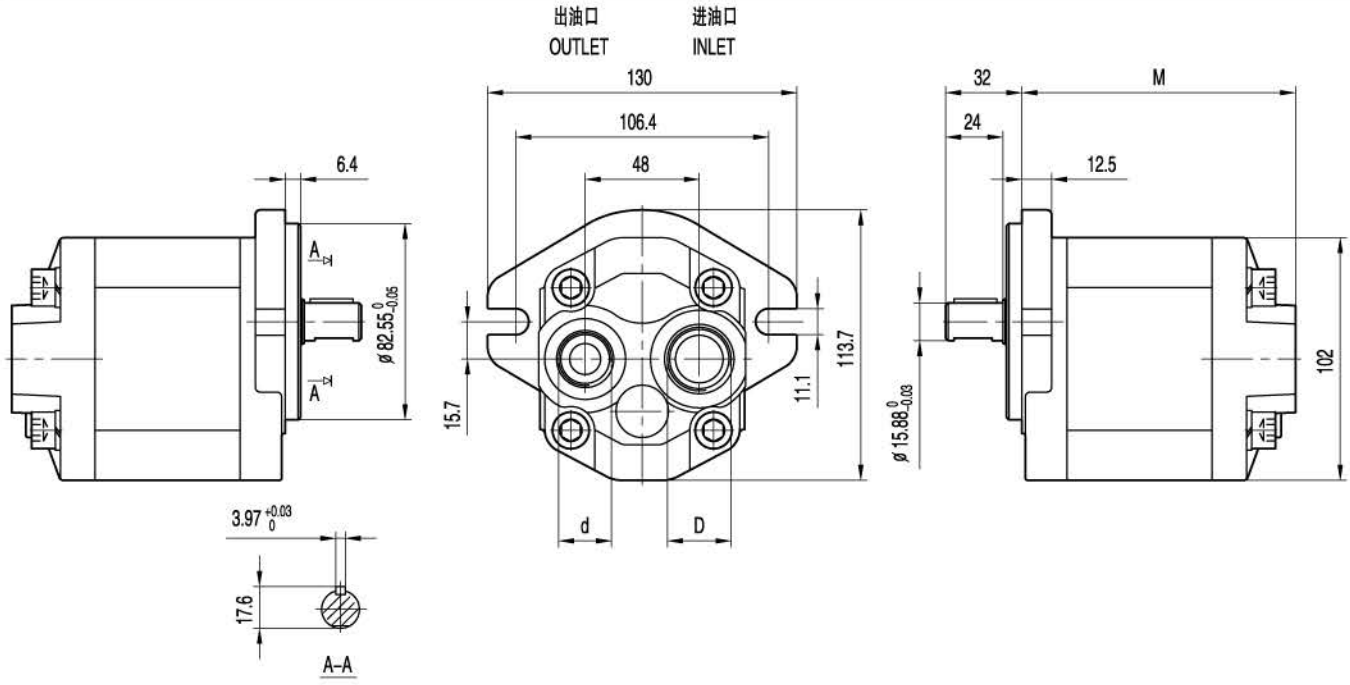

规格 Type	排量 Displacement	最大压力 Max pressure			最高转速 Max. speed	最低转速 Min. speed	尺寸 Dimensions		
		P1	P2	P3			M	D	d
	(cm³/rev)	bar	bar	bar	(r/min)	(r/min)	mm		
BHP2A0-D-3-R	3	270	285	300	4000	800	103.1	1 1/16-12UNF	7/8-14UNF
BHP2A0-D-4-R	4	270	285	300	4000	600	104.7	1 1/16-12UNF	7/8-14UNF
BHP2A0-D-6-R	6	270	285	300	4000	600	108	1 1/16-12UNF	7/8-14UNF
BHP2A0-D-8-R	8	270	285	300	3500	500	111.3	1 1/16-12UNF	7/8-14UNF
BHP2A0-D-10-R	10	270	285	300	3000	500	114.6	1 1/16-12UNF	7/8-14UNF
BHP2A0-D-12-R	12	270	285	300	3000	500	117.9	1 1/16-12UNF	7/8-14UNF
BHP2A0-D-14-R	14	250	265	280	4000	500	121.3	1 1/16-12UNF	7/8-14UNF
BHP2A0-D-16-R	16	250	265	280	4000	500	124.7	1 1/16-12UNF	7/8-14UNF
BHP2A0-D-18-R	18	250	265	280	3600	400	128	1 1/16-12UNF	7/8-14UNF
BHP2A0-D-20-R	20	220	235	250	3200	400	131.3	1 1/16-12UNF	7/8-14UNF
BHP2A0-D-22-R	22	220	235	250	3000	400	134.6	1 1/16-12UNF	7/8-14UNF
BHP2A0-D-25-R	25	200	215	230	3000	400	139.6	1 1/16-12UNF	7/8-14UNF
BHP2A0-D-28-R	28	180	190	200	2500	400	144.6	1 1/16-12UNF	7/8-14UNF
BHP2A0-D-30-R	30	160	170	180	2500	400	147.9	1 1/16-12UNF	7/8-14UNF

BHP2A0-Fx

"D"和"d"油口有螺纹加工，用O形圈密封,旁侧削平的SAE J1926/1 (ISO J1926-1)。
安装泵时，n.4 M10 螺钉扭矩设定为 70...75 Nm.

"D" and "d" ports are machined in compliance with threaded port with O-ring seal in truncated housing SAE J1926/1(ISO J1926-1).
To mount the pump, n.4 M10 screws, with a torque wrench setting fixed at 70...75 Nm.

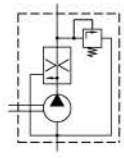

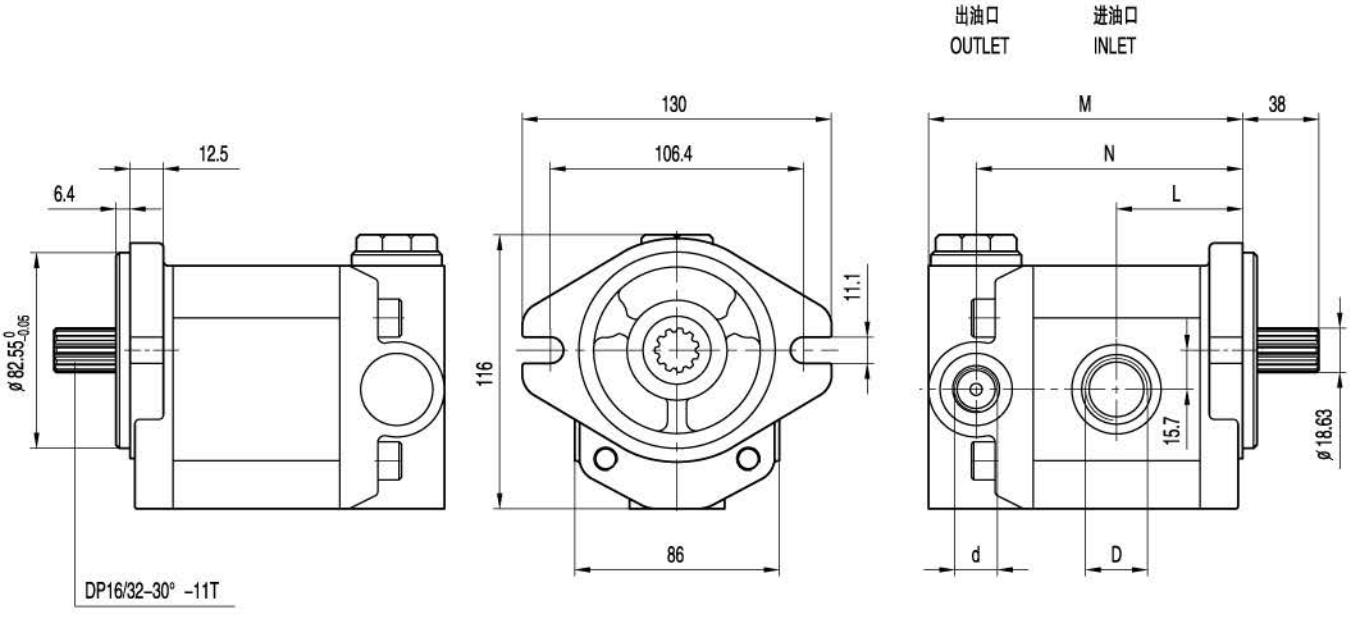

规格 Type	排量 Displacement	控制压力 Control pressure P1	控制流量 Control flow Q_{const}	最高转速 Max. speed	最低转速 Min. speed	尺寸 Dimensions M	L	N	D	d
	(cm³/rev)	bar	L/min	(r/min)	(r/min)	mm	mm	mm		
BHP2A0-D-3-Fx	3			4000	800	112.1	43.6	92.1	1 1/16-12UNF	7/8-14UNF
BHP2A0-D-4-Fx	4			4000	600	113.7	44.4	93.7	1 1/16-12UNF	7/8-14UNF
BHP2A0-D-6-Fx	6			4000	600	117	46	97	1 1/16-12UNF	7/8-14UNF
BHP2A0-D-8-Fx	8			3500	500	120.3	47.7	100.3	1 1/16-12UNF	7/8-14UNF
BHP2A0-D-10-Fx	10			3000	500	123.6	49.3	103.6	1 1/16-12UNF	7/8-14UNF
BHP2A0-D-12-Fx	12			3000	500	126.9	51	106.9	1 1/16-12UNF	7/8-14UNF
BHP2A0-D-14-Fx	14	100...180	2...30	4000	500	130.3	52.7	110.3	1 1/16-12UNF	7/8-14UNF
BHP2A0-D-16-Fx	16			4000	500	133.7	54.4	113.7	1 1/16-12UNF	7/8-14UNF
BHP2A0-D-18-Fx	18			3600	400	137	56	117	1 1/16-12UNF	7/8-14UNF
BHP2A0-D-20-Fx	20			3200	400	140.3	57.7	120.3	1 1/16-12UNF	7/8-14UNF
BHP2A0-D-22-Fx	22			3000	400	143.6	59.3	123.6	1 1/16-12UNF	7/8-14UNF
BHP2A0-D-25-Fx	25			3000	400	148.6	61.8	128.6	1 1/16-12UNF	7/8-14UNF
BHP2A0-D-28-Fx	28			2500	400	153.6	64.3	133.6	1 1/16-12UNF	7/8-14UNF
BHP2A0-D-30-Fx	30			2500	400	156.9	66	136.9	1 1/16-12UNF	7/8-14UNF

BHP2B0-FAx

M6 螺纹深 13,M18x1.5 螺纹深 14.
安装泵时，n.4 M10 螺钉扭矩设定为 70...75 Nm.
轴伸 M12x1.25螺母扭矩设定为50Nm.

M6 thread depth 13,M18x1.5 thread depth 14.
To mount the pump, n.4 M10 screws, with a torque wrench setting fixed at 70...75 Nm.
Shaft M12x1.25 nut, with a torque wrench setting fixed at 50 Nm.

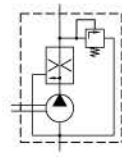

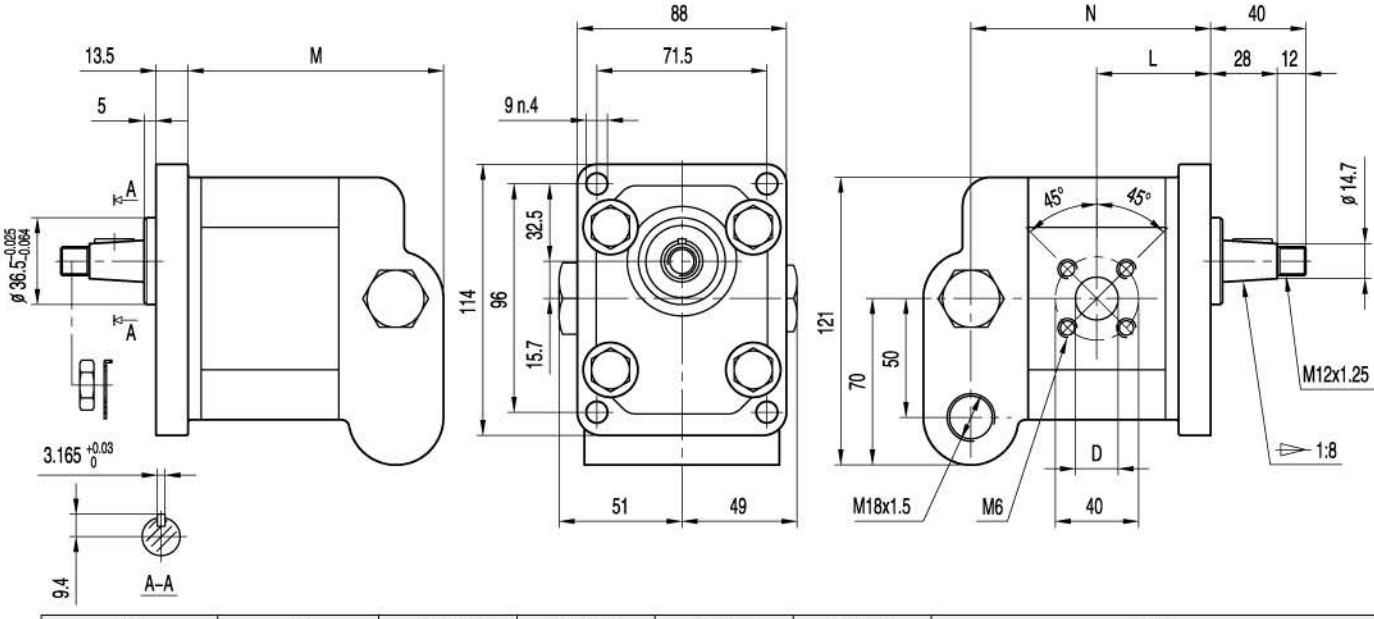

规格 Type	排量 Displacement	控制压力 Control pressure P1	控制流量 Control flow Q_{const}	最高转速 Max. speed	最低转速 Min. speed	尺寸 Dimensions M	L	N	D
	(cm³/rev)	bar	L/min	(r/min)	(r/min)	mm	mm	mm	mm
BHP2B0-D-3-FAx	3			4000	800	112.1	43.6	96.1	15
BHP2B0-D-4-FAx	4			4000	600	113.7	44.4	97.7	15
BHP2B0-D-6-FAx	6			4000	600	117	46	101	15
BHP2B0-D-8-FAx	8			3500	500	120.3	47.7	104.3	15
BHP2B0-D-10-FAx	10			3000	500	123.6	49.3	107.6	20
BHP2B0-D-12-FAx	12			3000	500	126.9	51	110.9	20
BHP2B0-D-14-FAx	14	100...180	2...30	4000	500	130.3	52.7	114.3	20
BHP2B0-D-16-FAx	16			4000	500	133.7	54.4	117.7	20
BHP2B0-D-18-FAx	18			3600	400	137	56	121	20
BHP2B0-D-20-FAx	20			3200	400	140.3	57.7	124.3	20
BHP2B0-D-22-FAx	22			3000	400	143.6	59.3	127.6	20
BHP2B0-D-25-FAx	25			3000	400	148.6	61.8	132.6	20
BHP2B0-D-28-FAx	28			2500	400	153.6	64.3	137.6	20
BHP2B0-D-30-FAx	30			2500	400	156.9	66	140.9	20

BAP2B3

带轴承式泵，能承受
径向和轴向载荷。
M6螺纹深13.
安装泵时，n.4 M10螺钉扭矩设定为
70...75 Nm.
轴伸M14x1.5螺母扭矩设定为 70 Nm.

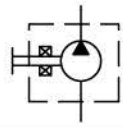

Pump with bearing,This option allows
radial and/or axial loads on the pump shaft.
M6 thread depth 13.
To mount the pump, n.4 M10 screws,
with a torque wrench setting fixed
at 70...75 Nm.
Shaft M14x1.5 nut, with a torque
wrenchs etting fixe d at 70 Nm.

出油口
OUTLET

进油口
INLET

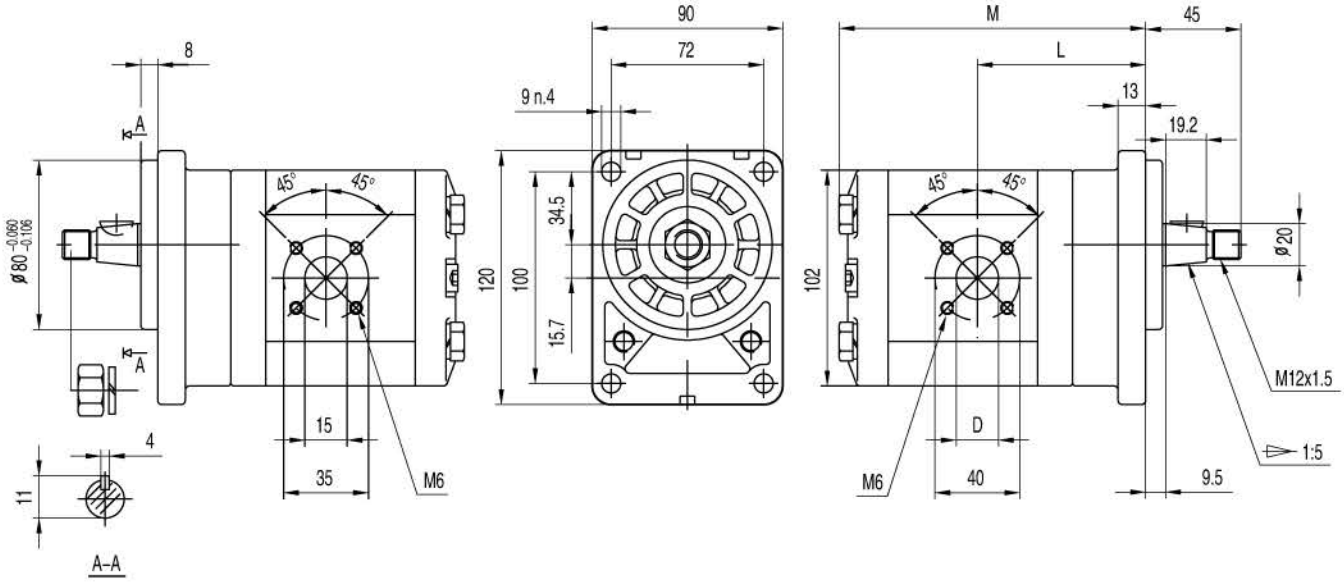

规格 Type	排量 Displacement	最大压力 Max pressure			最高转速 Max. speed	最低转速 Min. speed	尺寸 Dimensions		
		P1	P2	P3			M	L	D
	(cm^3/rev)	bar	bar	bar	(r/min)	(r/min)	mm	mm	mm
BHP2B3-D-3	3	270	285	300	4000	800	123.1	71.9	15
BHP2B3-D-4	4	270	285	300	4000	600	124.7	71.9	15
BHP2B3-D-6	6	270	285	300	4000	600	128.0	73.1	15
BHP2B3-D-8	8	270	285	300	3500	500	131.3	75.2	15
BHP2B3-D-10	10	270	285	300	3000	500	134.6	75.7	20
BHP2B3-D-12	12	270	285	300	3000	500	137.9	79.5	20
BHP2B3-D-14	14	250	265	280	4000	500	141.3	79.5	20
BHP2B3-D-16	16	250	265	280	4000	500	144.7	79.5	20
BHP2B3-D-18	18	250	265	280	3600	400	148.0	79.5	20
BHP2B3-D-20	20	220	235	250	3200	400	151.3	79.5	20
BHP2B3-D-22	22	220	235	250	3000	400	154.6	87.1	20
BHP2B3-D-25	25	200	215	230	3000	400	159.6	93.8	20
BHP2B3-D-28	28	180	190	200	2500	400	164.6	96.3	20
BHP2B3-D-30	30	160	170	180	2500	400	167.9	98.0	20

BHM2B0

M6螺纹深13, M8螺纹深17.
安装泵时，n.4 M10螺钉扭矩设定为
70...75 Nm.
轴伸M12x1.25螺母扭矩设定为 50 Nm.

M6 thread depth 13, M8 thread depth 17.
To mount the pump, n.4 M10 screws,
with a torque wrench setting fixed
at 70...75 Nm.
Shaft M12x1.25 nut, with a torque
wrenchsetting fixed at 50 Nm.

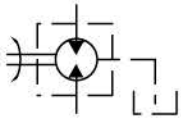

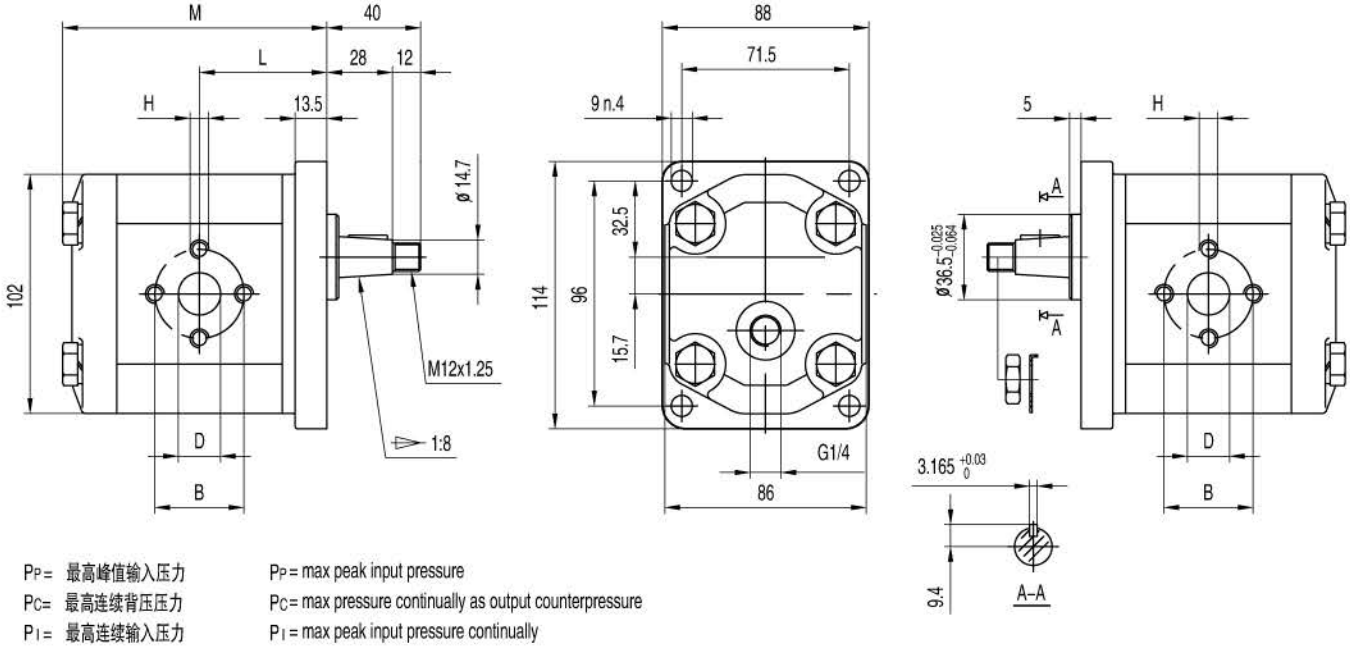

PP = 最高峰值输入压力
PC= 最高连续背压压力
PI = 最高连续输入压力

PP = max peak input pressure
PC= max pressure continually as output counterpressure
PI = max peak input pressure continually

规格 Type	排量 Displacement	最大压力 Max pressure			最高转速 Max. speed	最低转速 Min. speed	尺寸 Dimensions				
		P1	P2	P3			M	L	B	D	H
	(cm³/rev)	bar	bar	bar	(r/min)	(r/min)	mm	mm	mm	mm	
BHM2B0-R-3-Q1	3	280	270	295	4000	800	91.1	43.6	30	13	M6
BHM2B0-R-4-Q1	4	280	270	295	4000	600	92.7	44.4	30	13	M6
BHM2B0-R-6-Q1	6	280	270	295	4000	600	96.0	46.0	30	13	M6
BHM2B0-R-8-Q1	8	280	270	295	3500	500	99.3	47.7	30	13	M6
BHM2B0-R-10-Q1	10	280	270	295	3000	500	102.6	49.3	40	20	M8
BHM2B0-R-12-Q1	12	280	270	295	3000	500	105.9	51.0	40	20	M8
BHM2B0-R-14-Q1	14	260	250	275	4000	500	109.3	52.7	40	20	M8
BHM2B0-R-16-Q1	16	260	250	275	4000	500	112.7	54.4	40	20	M8
BHM2B0-R-18-Q1	18	260	250	275	3600	400	116.0	56.0	40	20	M8
BHM2B0-R-20-Q1	20	230	220	245	3200	400	119.3	57.7	40	20	M8
BHM2B0-R-22-Q1	22	230	220	245	3000	400	122.6	59.3	40	20	M8
BHM2B0-R-25-Q1	25	210	200	225	3000	400	127.6	61.8	40	22	M8
BHM2B0-R-28-Q1	28	200	190	215	2500	400	132.6	64.3	40	22	M8
BHM2B0-R-30-Q1	30	180	170	195	2500	400	135.9	66.0	40	22	M8

BAP2[BHP2]

前盖/FRONT COVER

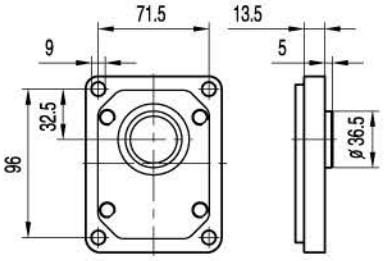

B0

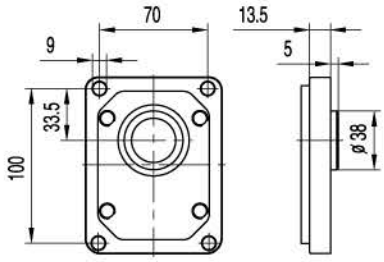

B1

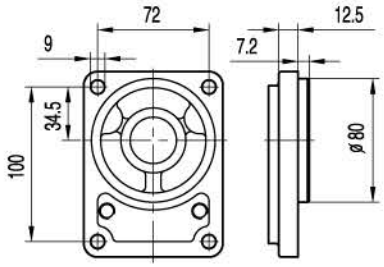

B2

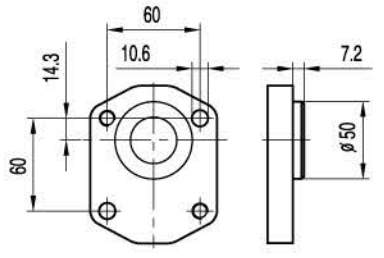

Q0

轴伸/SHAFTS

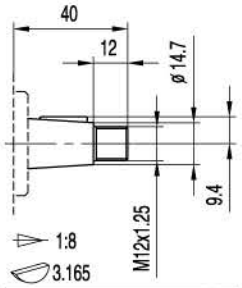

T0

最大扭矩 Max.Torque 200 Nm

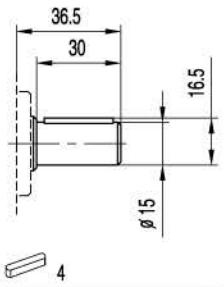

C4

最大扭矩 Max.Torque 135 Nm

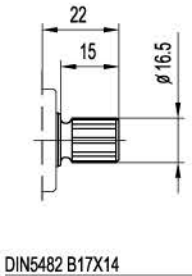

S7

最大扭矩 Max.Torque 150 Nm

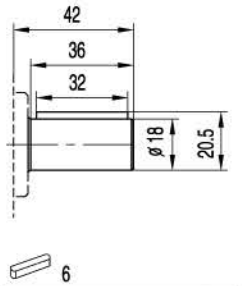

C2

最大扭矩 Max.Torque 150 Nm

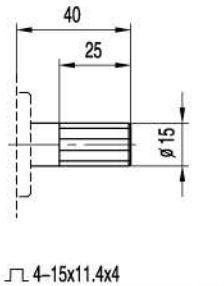

H0

最大扭矩 Max.Torque 185 Nm

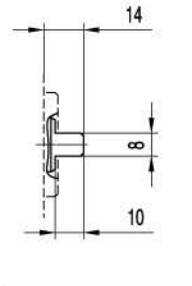

G0

最大扭矩 Max.Torque 100 Nm

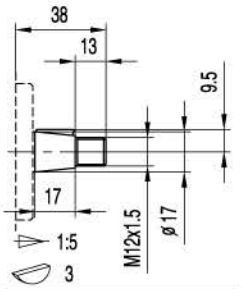

T1

最大扭矩 Max.Torque 180 Nm

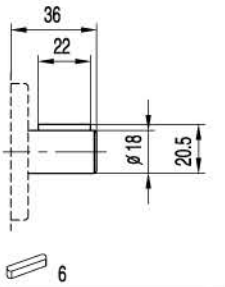

C3

最大扭矩 Max.Torque 150 Nm

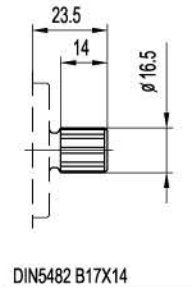

S6

最大扭矩 Max.Torque 150 Nm

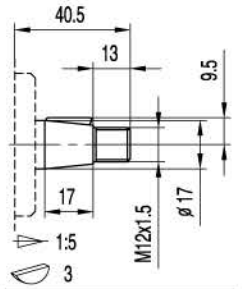

T1

最大扭矩 Max.Torque 180 Nm

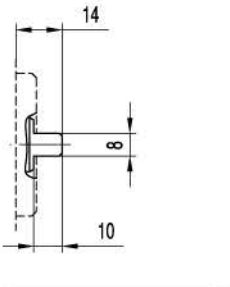

G0

最大扭矩 Max.Torque 100 Nm

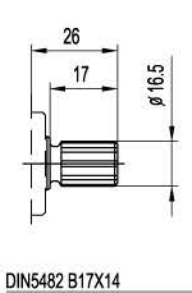

S3

最大扭矩 Max.Torque 150 Nm

BAP2[BHP2]

前盖/FRONT COVER

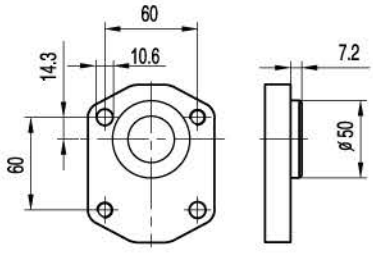

Q1

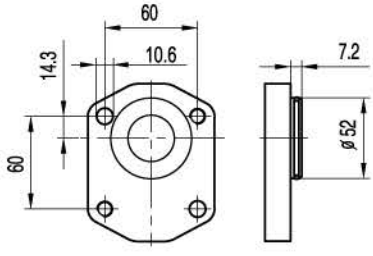

Q2

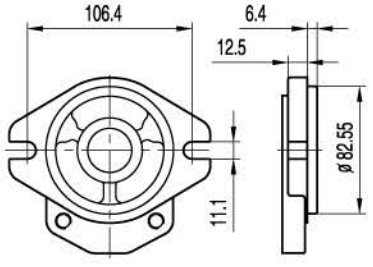

A0

轴伸/SHAFTS

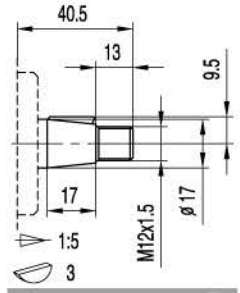

T1

最大扭矩 Max.Torque 180 Nm

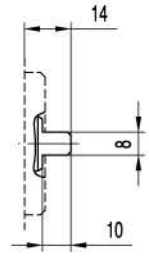

G0

最大扭矩 Max.Torque 100 Nm

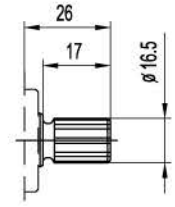

DIN5482 B17X14

S3

最大扭矩 Max.Torque 150 Nm

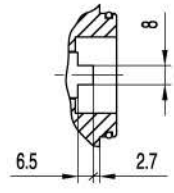

G1

最大扭矩 Max.Torque 100 Nm

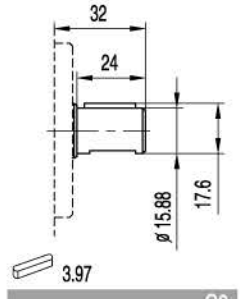

C0

最大扭矩 Max.Torque 140 Nm

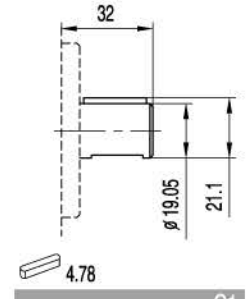

C1

最大扭矩 Max.Torque 160 Nm

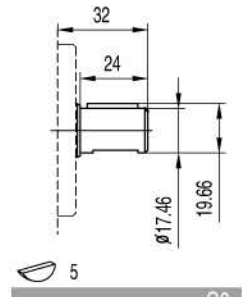

C6

最大扭矩 Max.Torque 180 Nm

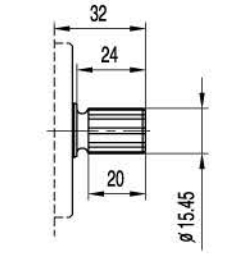

DP16/32-30° -9T

S0

最大扭矩 Max.Torque 185 Nm

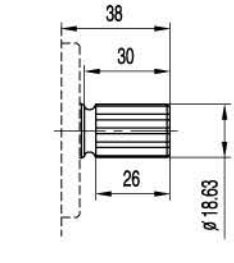

DP16/32-30° -11T

S1

最大扭矩 Max.Torque 200 Nm

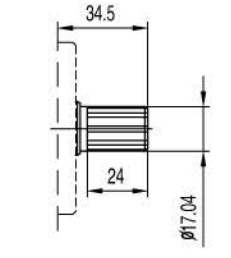

DP16/32-30° -10T

S8

最大扭矩 Max.Torque 190 Nm

BAP2[BHP2]

油口/PORTS

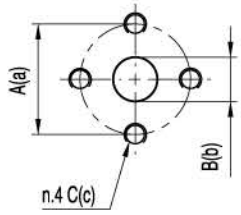

E0/E1/E2

规格 TYPE	油口代号 PORTS CODE	进油口 INLET			出油口 OUTLET		
		A	B	C	a	b	c
BA(H)P2...3 ÷ BA(H)P2...8	E0	30	13	M6	30	13	M6
BA(H)P2...10 ÷ BA(H)P2...22	E1	40	20	M8	30	13	M6
BA(H)P2...25 ÷ BA(H)P2...30	E2	40	22	M8	30	13	M6

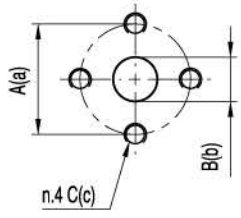

E3

规格 TYPE	进油口 INLET			出油口 OUTLET		
	A	B	C	a	b	c
BA(H)P2...3 ÷ BA(H)P2...8	38	14	M8	38	10	M8
BA(H)P2...10 ÷ BA(H)P2...22	38	18	M8	38	15	M8
BA(H)P2...25 ÷ BA(H)P2...30	38	20	M8	38	15	M8

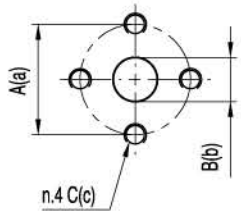

E4

规格 TYPE	进油口 INLET			出油口 OUTLET		
	A	B	C	a	b	c
BA(H)P2...8 ÷ BA(H)P2...10	40	13	M8	40	13	M8
BA(H)P2...12 ÷ BA(H)P2...20	40	19	M8	40	13	M8
BA(H)P2...22 ÷ BA(H)P2...28	40	19	M8	40	19	M8
BA(H)P2...30	40	21	M8	40	19	M8

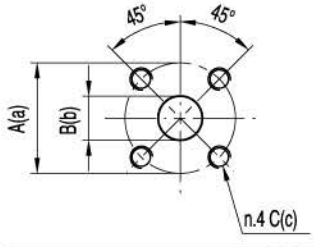

F0/F1/F5

规格 TYPE	油口代号 PORTS CODE	进油口 INLET			出油口 OUTLET		
		A	B	C	a	b	c
BA(H)P2...3 ÷ BA(H)P2...8	F0	40	15	M6	35	15	M6
BA(H)P2...10 ÷ BA(H)P2...30	F1	40	20	M6	35	15	M6
BA(H)P2...16 ÷ BA(H)P2...30	F5	55	26	M8	55	18	M8

BAP2[BHP2]

油口/PORTS

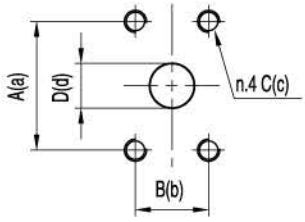

F2/F3/F4

规格 TYPE	油口代号 PORTS CODE	进油口 INLET				出油口 OUTLET			
		A	B	C	D	a	b	c	d
BA(H)P2...3 ÷ BA(H)P2...16	F2	38.1	17.48	5/16–18UNC	13	38.1	17.48	5/16–18UNC	13
BA(H)P2...18 ÷ BA(H)P2...20	F3	47.63	22.23	3/8–16UNC	20	38.1	17.48	5/16–18UNC	13
BA(H)P2...22 ÷ BA(H)P2...30	F4	47.63	22.23	3/8–16UNC	20	47.63	22.23	3/8–16UNC	20

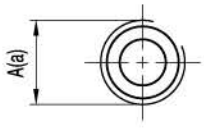

L0/L1/L3/L4

规格 TYPE	油口代号 PORTS CODE	进油口 INLET	出油口 OUTLET
		A	a
BA(H)P2...3 ÷ BA(H)P2...6	L0	G1/2	G1/2
BA(H)P2...8 ÷ BA(H)P2...30	L1	G3/4	G1/2
BA(H)P2...16 ÷ BA(H)P2...30	L3	G 1	G3/4
BA(H)P2...8 ÷ BA(H)P2...30	L4	G3/4	G3/4

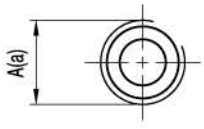

R0/R1/R2

规格 TYPE	油口代号 PORTS CODE	进油口 INLET	出油口 OUTLET
		A	a
BA(H)P2...3 ÷ BA(H)P2...12	R0	PT1/2	PT1/2
BA(H)P2...14 ÷ BA(H)P2...25	R1	PT3/4	PT1/2
BA(H)P2...28 ÷ BA(H)P2...30	R2	PT 1	PT3/4

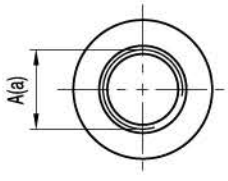

U0/U1/U2/U3

规格 TYPE	油口代号 PORTS CODE	进油口 INLET	出油口 OUTLET
		A	a
BA(H)P2...3 ÷ BA(H)P2...28	U0	1 1/16–12 UNF	7/8–14 UNF
BA(H)P2...30	U1	1 5/16–12 UNF	7/8–14 UNF
BA(H)P2...3 ÷ BA(H)P2...28	U2	7/8–14 UNF	3/4–16 UNF
BA(H)P2...8 ÷ BA(H)P2...30	U3	1 5/16–12 UNF	1 1/16–12 UNF